THIS DRAWING IS THE EXCLUSIVE PROPERTY OF MARQUARDT. WITHOUT THEIR CONSENT IT MAY NOT BE REPRODUCED OR GIVEN TO THIRD PARTIES.

CONFIDENTIAL

VERTRAULICH

1	2	3	4
recommended cut-out for snap-in fixing (edge opposite to snap-in direction)	wall thickness	length of cut-out	width of cut-out
	0.75 to 1	30 +0.1	22.2 +0.2
	>1 to 1.5	30.2 +0.1	22.2 +0.2
	>1.5 to 3	30.4 +0.1	22.2 +0.2

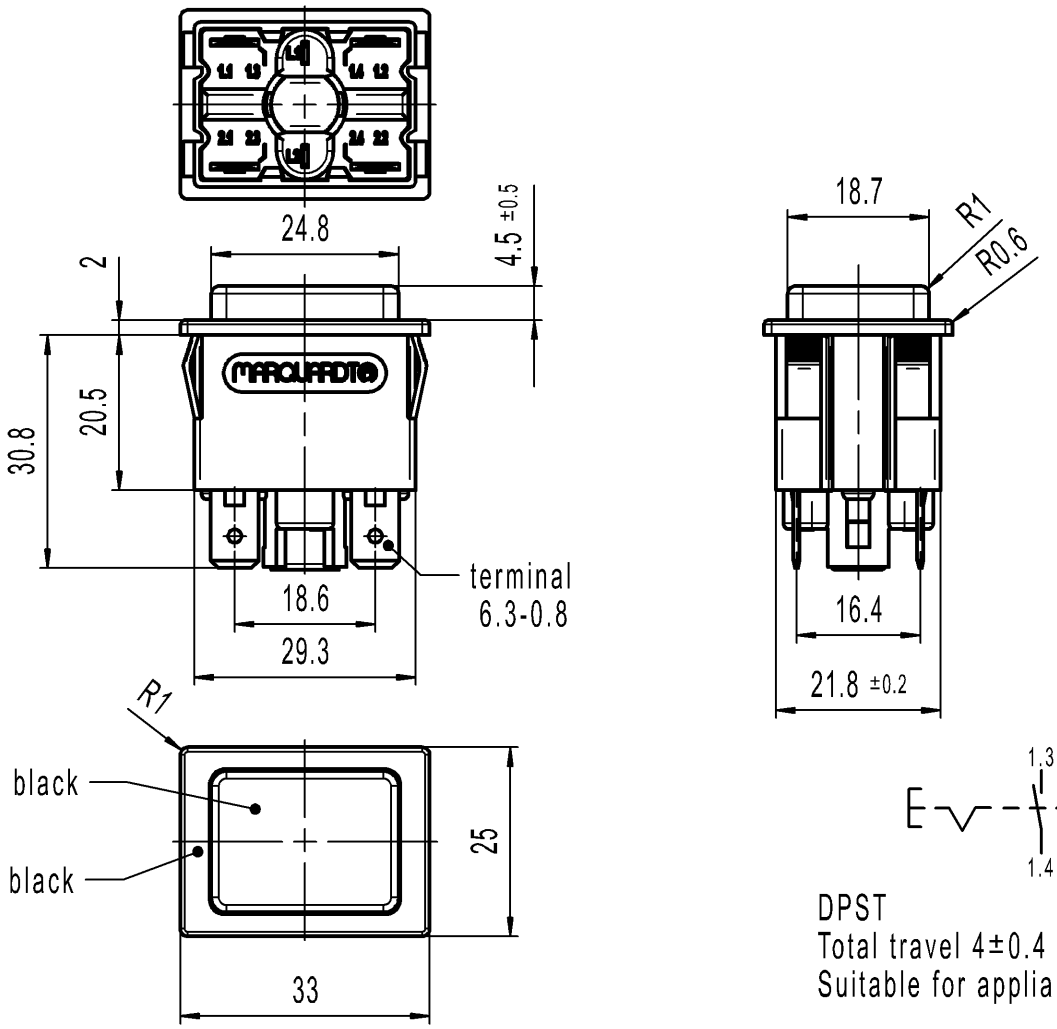

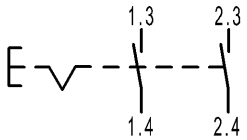

DPST
Total travel 4±0.4
Suitable for appliances of class II

Marking
MARQUARDT
1661.
16(4)/250~ T85/55

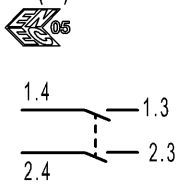

Code of manufacture: place/year/week

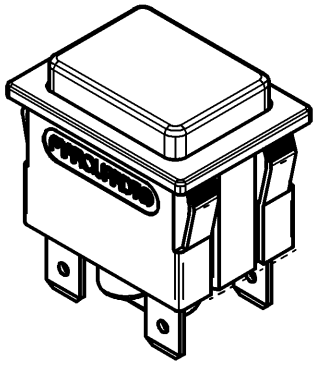

Figure	Type	Customer Part No.	Art.No.-PI
-	-	-	1661.0201-XX

Shape and location	Angle ± 2 °	Length			Radii	
	Edge tolerance	0-6	± 0.2	±		± 0.2
		>6-15	± 0.4	±		±
		>15-30	± 0.4	±		±
		>30-70	± 0.6	±		±
			±	±		±
			±	±		±
			±	±		±
			±	±		±

Index	MEC-No.	Date (YYYY-MM-DD)	Edited by
g	137245	2021-04-30	JOSHIO
f	32547	2002-05-23	SIG
e	28075	1999-10-12	MUT
d	26325	1998-09-29	BB

Sheet 01

Format DIN A4 | Projection | Scale 1:1

All dimensions are in millimetres

System NX V1872

Replacement of Zg.gl.Nr.v.29.09.1998

Ident.	Document number	Index
K	16610201	g

Appliance Switch

MARQUARDT

Alle Rechte bei Marquardt, auch fuer den Fall von Schutzrechtsanmeldungen. Jede Verfuegungsbefugnis, wie Kopier- und Weitergaberecht, bei uns.